Arch. Mech., 43, 1, pp. 57–70, Warszawa 1991

"Equilibrium" orientation distributions in systems of rigid, interacting particles subjected to potential flow

A. ZIABICKI (WARSZAWA)

THE EXISTENCE conditions for "equilibrium" (zero-flux) orientation distributions of rigid particles subjected to potential flow have been discussed. It has been shown that flow regimes admitting such distributions are restricted to rotationally symmetric extensional flows and particles with cylindrical symmetry. Extensional flow combined with external fields and/or intermolecular interactions produces more complex orientation distributions. A simple way of obtaining closed-form "equilibrium" distributions has been suggested. Solutions have the Boltzmann form

$$\Psi(\Theta) = \text{const}\exp\{-U_0(\Theta)/kT - U_{\text{int}}[\Psi(\Theta)]/kT + H(\Theta)\},$$

where U_0 denotes arbitrary potential of a particle in external field (s). U_{int}, a functional of the distribution function Ψ, describes energy of interaction of the test particle with other particles, treated in the mean-field approximation, and H is flow field potential. Admissible forms of $U_{\text{int}}[\Psi(\Theta)]$ and $H(\Theta)$ leading to closed-form solutions for the distribution function $\Psi(\Theta)$ are discussed.

Przedyskutowano warunki występowania "równowagowych" (bezstrumieniowych) rozkładów orientacji sztywnych cząstek w przepływach potencjalnych. Wykazano, że sytuacje dopuszczające takie rozkłady ograniczają się do osiowo-symetrycznych przepływów rozciągających i cząstek o symetrii obrotowej. Przepływy rozciągające połączone z zewnętrznymi polami orientującymi i/lub oddziaływaniami międzycząsteczkowymi prowadzą do bardziej złożonych rozkładów orientacji. Zaproponowano prostą metodę otrzymywania "równowagowych" rozkładów w postaci zamkniętej. Rozwiązania równania orientacji mają postać rozkładów Boltzmanna:

$$\Psi(\Theta) = \text{const}\exp\{-U_0(\Theta)/kT - U_{\text{int}}[\Psi(\Theta)]/kT + H(\Theta)\},$$

w których U_0 oznacza dowolny potencjał cząstki w zewnętrznym polu. U_{int}, funkcjonał zależny od szukanej funkcji rozkładu orientacji, Ψ, opisuje energię oddziaływania z innymi cząstkami w przybliżeniu średniego pola, a H oznacza potencjał przepływu. Przedyskutowano dopuszczalne postaci $U_{\text{int}}[\Psi(\Theta)]$ i $H(\Theta)$ prowadzące do zamkniętych rozwiązań na funkcję rozkładu $\Psi(\Theta)$.

Обсуждены условия появления "равновесного" распределения ориентации (отвечающего нулевому потоку) жестких частиц в поле потенциального течения. Показано, что такие распределения выступают лиш для частиц цилиндрической симетрии в одноосном растягивающем течении. Растягивающее течение, совместно с другими внешними полями и межмолекулярными взаимодействиями, вызывает более сложные распределения ориентации. Предложен простой способ вывода функции распределения ориентации в замкнутом виде. Решение принимает больцмановский вид:

$$\Psi(\Theta) = \text{const}\exp\{-U_0(\Theta)/kT - U_{\text{int}}[\Psi(\Theta)]/kT + H(\Theta)\},$$

где U_0 является произвольной потенциальной энергией частицы во внешнем поле, U_{int} — энергией взаимодействия с другими частицами в приближении среднего поля, будучей функционалом функции распределения Ψ. H — это потенциал поля течения. Обсущдены допустимые формы потенциалов $U_{\text{int}}[\Psi(\Theta)]$ и $\Psi(\Theta)$, прибодящих к решениям в замкнутом виде.

1. Introduction

POTENTIAL (irrotational) flows provide an important class of motions. Molecular orientation of particles or large molecules subjected to such flows affects kinematics and dynamics of many important processes and controls development of material properties.

A few decades ago, H. A. KRAMERS [1] observed that special form of orientation distribution can be obtained for dilute polymer solutions in potential flows. The distribution

http://rcin.org.pl

has a Boltzmann-type form in which flow contributes to the total "potential" of flowing particles. Kinematics of irrotational flows has been discussed by LEAL and HINCH [2], and Kramers' method used by various authors for dilute suspensions of rigid particles [3], solutions [4, 5] and melts [6, 7] of flexible polymer chains. Two factors make such orientation distributions important.

i. Closed-form solutions which result from the Kramers' method make possible an analysis of nonlinear behavior in strong flows, up to the limit of ideal orientation; such problems cannot be treated by standard perturbation methods, usually based on expansion over small intensity of flow or weak interaction.

ii. The distributions seem to describe some kind of equilibrium, in which rotational flux of the particles disappears.Extension of this method onto systems with interparticle interactions provides a basis for the analysis of flow-affected phase transitions. Orientation-dependent rod-rod interactions have been used in the theory of isotropic-nematic transitions [8–12]. Transitions in ferroelectric and ferromagnetic fluids, as well as crystallization of polar polymers (PVDF) [13] provide additional examples. Last, but not least, "equilibrium" orientation distributions can be used for the analysis of structure development and rheological behavior of various materials.

We will analyze in this paper conditions in which "equilibrium" (zero-flux) orientation distributions are admitted. We will also present a method of obtaining such distributions for systems of rigid particles subjected to irrotational flow and exhibiting various interparticle interactions treated in the mean-field approximation.

2. "Equilibrium" orientation in systems of non-interacting particles

We will discuss orientation of particles in the Riemannian space of Euler angles $\Theta = \vartheta, \varphi, \psi$ (Fig. 1). First two angles ($\Theta_1 = \vartheta$, $\Theta_2 = \varphi$) characterize orientation of particle axis, x_3, with respect to the laboratory system $X_1X_2X_3$. ϑ is an angle between x_3 and X_3, φ—angle on the plane X_1X_2 measured from X_1 to the projection of x_3. The third angle, $\Theta_3 = \psi$, describes rotation of the particle around its own axis x_3. This axis expressed in the laboratory system forms a unit vector, $\mathbf{u}$, with Cartesian coordinates

$$x_3 = \mathbf{u} = \{\sin\vartheta\cos\varphi, \sin\vartheta\sin\varphi, \cos\vartheta\}\,.$$

Orientation distribution $\Psi(\Theta, t)$ in dilute systems of rigid particles subjected to flow is described by the kinetic (Fokker–Planck) equation

$$\partial\Psi/\partial t + \mathrm{div}_r[\Psi\cdot\dot{\Theta}_0 - \mathbf{D}_r(\mathrm{grad}_r\,\Psi + \Psi\,\mathrm{grad}_r\,U/kT)] = 0\,, \tag{2.1}$$

where div_r, and grad_r denote differential operators in the Riemannian space of Euler angles.

In the multidimensional theory of crystal nucleation [14], we have derived metric characteristics of the configurational space including int. al. shapes, positions and orientations of molecular cluster. The space of Euler angles is a subspace of the configurational space analyzed in Ref. [14]. The covariant metric tensor for the subspace Θ ($\Theta_1 = \vartheta$, $\Theta_2 = \varphi$, $\Theta_3 = \psi$) reads:

$$g_{ik} = \begin{bmatrix} 1 & 0 & 0 \\ 0 & 1 & \cos\vartheta \\ \cos\vartheta & 0 & 1 \end{bmatrix} \tag{2.2}$$

http://rcin.org.pl

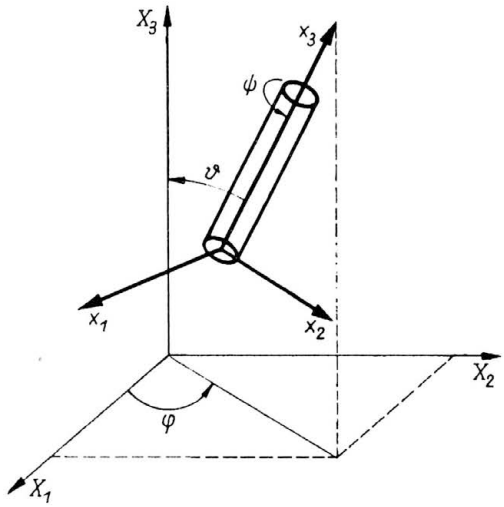

FIG. 1. Definition of coordinates. $X_1X_2X_3$—external (laboratory) system; $x_1x_2x_3$—local (particle) system. Euler angles, ϑ, φ, ψ, indicated.

and the related differential operators:

$$
\begin{aligned}
\mathrm{div}_r\, \mathbf{j} &= (1/\sin\vartheta)(\partial/\partial\vartheta)(\sin\vartheta \cdot j_1) + \partial j_2/\partial\varphi + \partial j_3/\partial\psi\,,\\
\mathrm{grad}_r\, F &= \mathbf{e}_1(\partial F/\partial\vartheta) + (\mathbf{e}_2/\sin^2\vartheta)[(\partial F/\partial\varphi) - \cos\vartheta(\partial F/\partial\psi)]\\
&\qquad + (\mathbf{e}_3/\sin^2\vartheta)[(\partial F/\partial\psi) - \cos\vartheta(\partial F/\partial\varphi)]\,,\\
\mathrm{rot}_r\, \mathbf{q} &= [\partial/\partial f(q_3 + q_2\cos\vartheta) - \partial/\partial\psi(q_2 + q_3\cos\vartheta)]\mathbf{e}_1\\
&\qquad + [\partial q_1/\partial\psi - \partial/\partial\vartheta(q_3 + q_2\cos\vartheta)]\mathbf{e}_2\\
&\qquad + [\partial/\partial\vartheta(q_2 + q_3\cos\vartheta) - \partial q_1/\partial\varphi]\mathbf{e}_3\,,
\end{aligned}
\tag{2.3}
$$

$\mathbf{D}_r$ denotes tensor of rotational diffusion in the space $\boldsymbol{\Theta}$

$$
\mathbf{D}_r = \begin{bmatrix} D^{11} & 0 & 0 \\ 0 & D^{22} & 0 \\ 0 & 0 & D^{33} \end{bmatrix}
\tag{2.4}
$$

and $U(\boldsymbol{\Theta})$ is orientation-dependent potential energy of the particle. $\dot{\boldsymbol{\Theta}}_0 = \{\dot{\vartheta}_0, \dot{\varphi}_0, \dot{\psi}_0\}$ denotes convective rotational velocity, i.e. rotational velocity related to unperturbed flow field.

The tensor of diffusion depends on particle symmetry. Symmetry reflected by $\mathbf{D}_r$ concerns shape and hydrodynamic properties of the particles. A given class of shape symmetry does not exclude different symmetry of physical properties. E.g. spherical particles can exhibit uniaxial or triaxial polarizability, permanent dipole moment, etc.

"Equilibrium" solution of Eq. (2.1) exists in the steady-state ($\partial\Psi/\partial t = 0$) when the rotational flux disappears, i.e. when

$$
\Psi\dot{\boldsymbol{\Theta}}_0 - \mathbf{D}_r(\mathrm{grad}_r\, \Psi + \Psi\, \mathrm{grad}_r\, U/kT) = 0\,.
\tag{2.5}
$$

It is evident that Eq. (2.5) is possible only if there exists a scalar potential, $H(\boldsymbol{\Theta})$, which

http://rcin.org.pl

satisfies the condition

$$\mathbf{D}_r^{-1} \cdot \dot{\mathbf{\Theta}}_0 = \mathrm{grad}_r\, H(\mathbf{\Theta}) . \tag{2.6}$$

When Eq. (2.6) is satisfied, "equilibrium" solution of Eq. (2.1) results in the form of a Boltzmann distribution

$$\Psi(\mathbf{\Theta}) = \mathrm{const}\exp[-U(\mathbf{\Theta})/kT + H(\mathbf{\Theta})] . \tag{2.7}$$

The effective "potential" in Eq. (2.7) consists of the potential energy of the particle,and the contribution of flow. Since the distribution is normalized, convergence requires that the total potential, $(U - kTH)$, is positive definite.

Existence of the "flow potential", H, is controlled by two factors: flow field and particle shape. Flow field, characterized by velocity gradient tensor in the Euclidean space, consists of a symmetric ($\mathbf{A}$) and an antisymmetric part ($\mathbf{\Omega}$)

$$\nabla \mathbf{V} = \mathbf{A} + \mathbf{\Omega} . \tag{2.8}$$

It has been shown by JEFFERY [15] that in a rotational flow particles perform periodic motions and no "equlibrium" (zero-flux) state is admitted. Therefore a necessary (but not sufficient) condition for "equilibrium" orientation distribution is irrotational character of flow, i.e. absence of the antisymmetric part of the velocity gradient, $\mathbf{\Omega} = \mathbf{0}$.

Discussing effects of particle symmetry, we will consider ellipsoids which seem to provide a reasonably general model of smooth rigid particles. Symmetry is characterized by dimensionless shape factors

$$R_{ij} = -R_{ji} = (a_i^2 - a_j^2)/(a_i^2 + a_j^2) , \tag{2.9}$$

where a_1, a_2, a_3, denote semi-axes of the ellipsoids. Components of the rotational diffusion tensor $\mathbf{D}_r$, Eq. (2.4) are functions of particle volume and shape factors R_{ij}.

We will discuss effects of flow geometry and particle shape on the existence of the potential $H(\mathbf{\Theta})$ from Eq. (2.6). Since rotation of $\mathrm{grad}_r\, H$ must vanish, Eq. (2.6) yields

$$\mathrm{rot}_r(\mathbf{D}_r^{-1}\dot{\mathbf{\Theta}}_0) = 0 . \tag{2.10}$$

Using rot_r operator from Eq. (2.3) we obtain three identities which must be satisfied independently of orientation

$$\begin{aligned} &(\partial/\partial\varphi)(\dot{\vartheta}_0/D^{11}) - (\partial/\partial\vartheta)(\dot{\varphi}_0/D^{22} + \cos\vartheta \cdot \dot{\psi}_0/D^{33}) \equiv 0 , \\ &(\partial/\partial\psi)(\dot{\vartheta}_0/D^{11}) - (\partial/\partial\vartheta)(\dot{\psi}_0/D^{33} + \cos\vartheta \cdot \dot{\varphi}_0/D^{22}) \equiv 0 , \\ &(\partial/\partial\psi)(\dot{\varphi}_0/D^{22} + \cos\vartheta \cdot \dot{\psi}_o/D^{33}) \\ &\qquad - (\partial/\partial\varphi)(\dot{\psi}_0/D^{33} + \cos\vartheta \cdot \dot{\varphi}_0/D^{22}) \equiv 0 . \end{aligned} \tag{2.11}$$

We will base our analysis on the classical theory of ellipsoidal suspensions by JEFFERY [15] who derived general equations for convective rotational velocities in uniform flow. Using this method we will calculate $\dot{\vartheta}_0$, $\dot{\varphi}_0$, $\dot{\psi}_0$ for various flows, substitute them into identities (2.11) and determine conditions admitting existence of the potential $H(\mathbf{\Theta})$ and, consequently, "equilibrium" state of orientation.

The method of Jeffery[15] permits calculation of the rotational velocities for arbitrary ellipsoids and arbitrary geometry of flow. Earlier attempts have shown that "equilibrium" orientation can be reached only in situations exhibiting high degree of symmetry. Therefore we will confine our analysis to two selected flow conditions: rotation of triaxial ellipsoids in a uniaxial extensional flow, and behavior of cylindrically symmetrical ellipsoids (spheroids) in a general irrotational flow.

http://rcin.org.pl

2.1. Effects of particle symmetry

Consider triaxial ellipsoids with all R_{ij} and all D^{ii} different. Deformation rate tensor **A** expressed in Cartesian coordinates of the laboratory system reads:

$$\mathbf{A} = \begin{bmatrix} A_{11} & 0 & 0 \\ 0 & A_{22} & 0 \\ 0 & 0 & A_{33} \end{bmatrix}. \tag{2.12}$$

The flow exhibits rotational symmetry with respect to the axis X_3. Uniaxial elongation takes place when $A_{33} > A_{11}$, uniaxial compression — when $A_{33} < A_{11}$. Components of $\dot{\Theta}_0$ calculated for flow conditions characterized by Eq. (2.12) read:

$$\begin{aligned} \dot{\vartheta}_0 &= 1/2(A_{33} - A_{11}) \sin 2\vartheta [(R_{23} + R_{31}) \sin^2 \psi - R_{31}], \\ \dot{\varphi}_0 &= -1/2(A_{33} - A_{11}) \cos \vartheta \sin 2\psi (R_{23} + R_{31}), \\ \dot{\psi}_0 &= 1/2(A_{33} - A_{11}) \sin 2\psi [(R_{23} + R_{31} \cos^2 \vartheta) - R_{12} \sin^2 \vartheta]. \end{aligned} \tag{2.13}$$

Substituting Eqs. (2.13) into identities (2.11) and assuming constant components of diffusion and velocity gradient tensor, we obtain

$$\begin{aligned} &(A_{33} - A_{11})(\sin \vartheta \sin 2\psi / D^{33})[(D^{33}/D^{22} - 3\cos^2 \vartheta)(R_{23} + R_{31}) \\ &\qquad\qquad + (1 - 3\cos^2 \vartheta) R_{12}] \equiv 0, \\ &(A_{33} - A_{11})(\sin 2\vartheta \sin 2\psi / D^{33})[(1 + D^{33}/D^{11} - D^{33}/D^{22})(R_{23} + R_{31}) \\ &\qquad\qquad + R_{12}] \equiv 0, \\ &(A_{33} - A_{11})(\cos \vartheta \sin 2\psi / D^{33})[(\cos^2 \vartheta - D^{33}/D^{22})(R_{23} + R_{31}) \\ &\qquad\qquad + R_{12} \sin^2 \vartheta] \equiv 0. \end{aligned} \tag{2.14}$$

It is evident that identities (2.14) are satisfied only for cylindrical particles, for which

$$R_{23} + R_{31} = 0 \tag{2.15$_1$}$$

and

$$R_{12} = 0. \tag{2.15$_2$}$$

For reasons explained below we assume

$$R_{31} \neq 0. \tag{2.15$_3$}$$

Particles which admit "equilibrium" orientation distribution in uniaxial flow (Eq. (2.12)) must exhibit two equal semi-axes ($a_1 = a_2$) and a different third axis, a_3. Although from the conditions (2.14) do not follow any explicit restrictions on the rotational diffusion coefficients, Eqs. (2.15) stipulate

$$D^{11} = D^{22} \neq D^{33}. \tag{2.16}$$

Identities Eqs. (2.14) are satisfied also for spherically symmetric particles ($a_1 = a_2 = a_3$) with all R_{ij} equal to zero. The case is trivial, because for spherical particles rotational velocity is equal to zero, potential $H(\Theta)$ reduces to a constant, and flow does not affect orientation.

http://rcin.org.pl

2.2. Effects of flow geometry

We will consider cylindrically symmetrical ellipsoids ($a_1 = a_2 \neq a_3$) in a uniform irrotational flow characterized by deformation rate tensor

$$\mathbf{A} = \mathbf{A}^T = \begin{bmatrix} A_{11} & A_{12} & A_{13} \\ \cdot & A_{22} & A_{23} \\ \cdot & \cdot & A_{33} \end{bmatrix}. \tag{2.17}$$

The shapes factors considered

$$\begin{aligned} &R_{31} = -R_{13} = R_{32} = -R_{23} \neq 0, \\ &R_{21} = R_{12} = 0, \end{aligned} \tag{2.18}$$

imply cylindrical symmetry and yield two equal diagonal components of the diffusion rate tensor (Eq. (2.16)). Note that the equality $D^{11} = D^{22}$ for cylindrical particles does not hold true if metric tensor of the orientation space is different to one in Eq. (2.2). YAMAKAWA [16] who analyzed orientation of rodlike particles in a Euclidean space with a different metric obtained

$$D^{11} = D^{22} \sin^2 \vartheta .$$

Rotational velocities calculated for the flow characterized by Eqs. (2.17), (2.18) read

$$\begin{aligned} \dot{\vartheta}_0 &= -1/2R_{31} \sin 2\vartheta[A_{33} - A_{11} - (A_{22} - A_{11}) \sin^2 \varphi \\ &\qquad - A_{12} \sin 2\varphi] + R_{31} \cos 2\vartheta[A_{13} \cos \varphi + A_{23} \sin \varphi], \\ \dot{\varphi}_0 &= 1/2R_{31}[(A_{22} - A_{11}) \sin 2\varphi + 2A_{12} \cos 2\varphi] \\ &\qquad + R_{31} \cot \vartheta[A_{23} \cos \varphi - A_{13} \sin \varphi], \\ \dot{\psi}_0 &= -1/2R_{31} \cos \vartheta[(A_{22} - A_{11}) \sin 2\varphi + 2A_{12} \cos 2\varphi] \\ &\qquad - R_{31} \cot \vartheta \cos \vartheta[A_{23} \cos \varphi - A_{13} \sin \varphi]. \end{aligned} \tag{2.19}$$

Unlike $\dot{\mathbf{\Theta}}_0$ for non-cylindrical particles (Eqs. (2.13)), rotational velocities from Eqs. (2.19) can be expressed as gradients of a scalar potential, Q

$$\begin{aligned} Q(\vartheta, \varphi) = -1/2R_{31} \sin^2 \vartheta[(A_{33} - A_{11}) - (A_{22} - A_{11}) \sin^2 \varphi \\ - A_{12} \sin 2\varphi] + 1/2R_{31} \sin 2\vartheta(A_{13} \cos \varphi + A_{23} \sin \varphi) \end{aligned} \tag{2.20}$$

but this is not sufficient for the existence of the other potential, $H(\mathbf{\Theta})$, and does not satisfy identities (2.11).

Substitution of $\dot{\mathbf{\Theta}}_0$ from Eqs. (2.19) with D^{ii} and A_{ij} constants into Eqs. (2.11) yields

$$\begin{aligned} &R_{31}(1/D^{11} - 1/D^{33})[1/2(A_{22} - A_{11}) \sin 2\vartheta \sin 2\varphi \\ &\qquad + (A_{23} \cos \varphi - A_{13} \sin \varphi)(1 + \sin^2 \vartheta - 2 \sin^4 \vartheta)/ \sin^2 \vartheta \\ &\qquad + A_{12} \sin 2\vartheta \cos 2\varphi] \equiv 0, \\ &R_{31}(1/D^{11} - 1/D^{33})[1/2(A_{22} - A_{11}) \sin \vartheta \sin 2\varphi \\ &\qquad + (A_{23} \cos \varphi - A_{13} \sin \varphi)(1 + \sin^2 \vartheta) \cos \vartheta / \sin^2 \vartheta \\ &\qquad + A_{12} \sin \vartheta cos 2\varphi] \equiv 0, \\ &R_{31}(1/D^{11} - 1/D^{33})[(A_{22} - A_{11}) \cos \vartheta \cos 2\varphi \\ &\qquad - (A_{23} \sin \varphi + A_{13} \cos \varphi) \cos \vartheta \cot \vartheta] \equiv 0. \end{aligned} \tag{2.21}$$

http://rcin.org.pl

It is evident that the above identities are satisfied only for fields with vanishing non-diagonal components

$$A_{12} = A_{23} = A_{13} = 0, \tag{2.22$_1$}$$

and two normal components equal to each other

$$A_{22} = A_{11} \neq A_{33}. \tag{2.22$_2$}$$

Equations (2.18) and (2.22) provide a non-trivial condition for "equilibrium" orientation. The conditions are also satisfied for arbitrary flow field when all R_{ij} vanish, which in an irrotational flow corresponds to zero particle rotational velocity and potential H independent of orientation.

Summing up, we arrive at the conclusion that the only flow regime admitting "equilibrium" orientation distribution, is uniaxial extensional flow (Eq. (2.12)) acting on particles with cylindrical symmetry (Eq. (2.18)). Neither irrotational motion of the viscous continuum ($\mathbf{\Omega} = \mathbf{0}$) nor potential rotation of particles, $\dot{\mathbf{\Theta}}_0 = \mathrm{grad}_r\, Q(\mathbf{\Theta})$, are sufficient conditions for "equilibrium" orientation. Lower symmetries of suspended particles and/or more complex geometries of flow invariably lead to non-zero fluxes and exclude the state of rotational "equilibrium".

The admissible flow potential, $H(\vartheta)$, reads

$$H(\vartheta, \varphi, \psi) \to H(\vartheta) = -1/2 R_{31} \sin^2 \vartheta (A_{33} - A_{11})/D^{11} \tag{2.23}$$

and the related orientation distribution

$$\Psi(\vartheta, \varphi, \psi) = C \exp[-U(\vartheta, \varphi, \psi)/kT + 1/2 R_{31} \sin^2 \vartheta (A_{33} - A_{11})/D^{11}]. \tag{2.24}$$

Although the existence of flow potential, H, is limited to highly symmetric flow regimes, symmetry of the other potential, $U(\mathbf{\Theta})$ is not restricted. Admissible H is a function of one angle only (ϑ), but other fields (electric, magnetic) can produce more complex orientation distributions.

3. Orientation-dependent interactions and potential energy

3.1. Field-particle interactions

"Equilibrium" orientation distributions admit any kind of orientation-dependent field-particle interactions. An example is provided by particles in an electric (magnetic) field, $\mathbf{E}$. Assume that the particle has a permanent dipole moment, $\boldsymbol{\mu}_p$, and/or non-spherical polarizability tensor, $\boldsymbol{\alpha}$.

The total dipole moment, $\boldsymbol{\mu}$, includes a permanent, and an induced contribution

$$\boldsymbol{\mu} = \boldsymbol{\mu}_p + \boldsymbol{\alpha} \cdot \mathbf{E} \tag{3.1}$$

which yield particle energy

$$U_0(\mathbf{\Theta}) = -\int \boldsymbol{\mu} \cdot d\mathbf{E} = -\boldsymbol{\mu}_p \cdot \mathbf{E} - 1/2(\boldsymbol{\alpha} \cdot \mathbf{E}) \cdot \mathbf{E}. \tag{3.2}$$

The potential is controlled by particle symmetry and orientation of the field $\mathbf{E}$. Polarizability tensor, $\boldsymbol{\alpha}$, expressed in the local coordinate system $x_1 x_2 x_3$ associated with the

http://rcin.org.pl

particle

$$\alpha = \begin{bmatrix} \alpha_{11} & 0 & 0 \\ 0 & \alpha_{22} & 0 \\ 0 & 0 & \alpha_{33} \end{bmatrix}, \tag{3.3}$$

in a general case is triaxial (all α_{ii} different) and μ_p can be arbitrarily oriented with respect to geometrical axes of the particle.

In the special case of cylindrical particles dipole moment is directed along the geometrical axis, x_3, and the polarizability tensor α is uniaxial ($\alpha_{11} = \alpha_{22}$). Transformation of α from local coordinates to the laboratory system $X_1X_2X_3$, in which geometrical axis of the particle (x_3) forms vector $\mathbf{u}$, yields

$$\alpha = \alpha_{11} \cdot \mathbf{I} + \Delta\alpha \mathbf{u} \otimes \mathbf{u}, \tag{3.3$_1$}$$

and the particle-field potential reduces to

$$U_0(\vartheta, \varphi) = -\mu_p(\mathbf{E} \cdot \mathbf{u}) - 1/2\Delta\alpha(\mathbf{E} \cdot \mathbf{u})^2, \tag{3.4}$$

$\Delta\alpha = \alpha_{33} - \alpha_{11}$ is a measure of polarization anisotropy. For uniaxial particles, U_0 is a function of ϑ, and φ; the third Euler angle, ψ, appears only when polarizability tensor is triaxial (all a_{ii} different), and/or when the permanent dipole moment, μ_p is inclined to particle axis, $\mathbf{u}(x_3)$.

The existence of field-particle interactions does not affect the form of the kinetic equation or the possibility of obtaining "equilibrium" solutions. In the absence of flow, or in the case of spherical particles (both leading to $\mathrm{grad}_r H = 0$) "equilibrium" solution (Eq. (2.24)) reduces to the true Boltzmann distribution

$$\Psi(\vartheta, \varphi, \psi) = C \exp[-U_0(\vartheta, \varphi, \psi)/kT]. \tag{2.24$_1$}$$

3.2. Particle-particle interactions

The kinetic equation (Eq. (2.1)) changes its form when particle-particle interactions are taken into account. An exact description of such interactions requires pair orientation function, $\Psi^{(2)}(\Theta, \Theta', \mathbf{r}_{12})$ characterizing simultaneous orientation and separation of two interacting particles. This should be derived from a hierarchy of dynamic equations, and an appropriate pair interaction potential $\beta(\Theta, \Theta', \mathbf{r}_{12})$. LUCKHURST [17] demonstrated how BBGKY hierarchy can be closed to obtain mean-field approximation of the intermolecular potential; this will be used also in this paper. $\Psi^{(2)}$ is replaced by a product of two singlet orientation distributions, and a correlation function for the separation vector $\mathbf{r}_{12}$

$$\Psi^{(2)}(\Theta, \Theta', \mathbf{r}_{12}) \simeq \Psi(\Theta)\Psi(\Theta') \cdot g_2(\mathbf{r}_{12}). \tag{3.5}$$

The correlation function, g_2, and the pair potential, β, are averaged over $\mathbf{r}_{12}$, and interaction energy of a test particle with orientation Θ is obtained by integration of the pair potential, $\beta(\Theta, \Theta', \mathbf{r}_{12})$, over orientation of all particles interacting with the test particle

$$U_{\mathrm{int}}(\Theta) = \int \Psi(\Theta')\, d\Theta' \int g_2(\mathbf{r}_{12}) d\mathbf{r}_{12} \beta(\Theta, \Theta', \mathbf{r}_{12}). \tag{3.6}$$

http://rcin.org.pl

Interaction potentials for particle with cylindrical symmetry can be expanded in series of Legendre polynomials of the angle α_{12} between particle axes

$$\beta(\Theta, \Theta', \mathbf{r}_{12}) = \text{const} + p_1(\mathbf{r}_{12})P_1(\mathbf{u}\cdot\mathbf{u}') + p_2(\mathbf{r}_{12})P_2(\mathbf{u}\cdot\mathbf{u}') + \ldots + p_n(\mathbf{r}_{12})\cdot P_n(\mathbf{u}\cdot\mathbf{u}')\,. \tag{3.7}$$

Angle α_{12} can be expressed by unit vectors $\mathbf{u}$ and $\mathbf{u}'$ of the particles' symmetry axes. Expansion coefficients, $p_n(\mathbf{r}_{12})$, are related to physical nature of the interactions. Equation (3.7) can be converted to Euler angles $\vartheta, \vartheta', \varphi, \varphi'$ by putting

$$\cos\alpha_{12} = \mathbf{u}\cdot\mathbf{u}' = \sin\vartheta\sin\vartheta'\cos(\varphi-\varphi') + \cos\vartheta\cos\vartheta'\,, \tag{3.8}$$

and using addition theorem for Legendre polynomials

$$P_L(\mathbf{u}\cdot\mathbf{u}') = P_L(\cos\vartheta)P_L(\cos\vartheta') + 2\sum_{m=1}^{L}[(n-m)!/(n+m)!]P_L^m(\cos\vartheta)P_L^m(\cos\vartheta')\cos m(\varphi-\varphi')\,, \tag{3.9}$$

where P_L^m are associated Legendre polynomials. Because of the assumed cylindrical symmetry of the particles, the third Euler angles (ψ, ψ') do not appear.

Equation (3.7) provides a reasonably general model for orientation-dependent interactions of cylindrically symmetric particles. Individual terms in Eq. (3.9) can be used to describe long-range electrostatic interactions in the multipole approximation [18]: P_1 term describes dipole, P_2 - quadrupole, $P_L - 2^n$ - pole interactions. MAIER and SAUPE [9] described dispersion forces with the quadrupole term, P_2, COTTER [19] and others used a combination of P_2 and P_4 terms as an approximation for the excluded volume potential, etc. The original derivation of the hard-rod potential by ONSAGER [8] for a pair of cylinders each with length, L, and diameter d, averaged over $\mathbf{r}_{12}$ yielded

$$[\beta(\Theta, \Theta')]_{\text{ave}}] = 2ckT(L^2d)|\mathbf{u}\times\mathbf{u}'|\,. \tag{3.10}$$

Interaction of particles with lower symmetry requires all three Euler angles. LUCKHURST [17] and STONE [18] suggest expansion in generalized spherical harmonics (Wigner matrices)

$$\beta(\vartheta, \varphi, \psi, \vartheta', \varphi', \psi', \mathbf{r}_{12}) = \sum u(LL'J, nn', mm'M; \mathbf{r}_{12})D^L_{m,n}(\vartheta, \varphi, \psi) \times D^{L'}_{m',n'}(\vartheta', \varphi', \psi')Y_{J,M}(\Theta, \Phi)\,, \tag{3.11}$$

where $D^L_{m,n}$ are Wigner matrices, and $Y_{J,M}(\Theta, \Phi)$ is a spherical harmonic of polar angles characterizing orientation of the interparticle vector

$$\mathbf{r}_{12} = r_{12}\cdot\{\sin\Theta\cos\Phi, \sin\Theta\sin\Phi, \cos\Theta\}\,. \tag{3.12}$$

Wigner matrices can be presented in the form [20]

$$D^L_{m,n}(\vartheta, \varphi, \psi) = d^L_{m,n}(\vartheta)\exp(-im\varphi)\exp(-in\psi)\,, \tag{3.13}$$

where $d^L_{m,n}(\vartheta)$ are "reduced" or "small" Wigner matrices tabulated in Ref. [20]. In the case of cylindrical symmetry (no angle ψ), $D^L_{m,n}$ reduce to spherical harmonics

$$D^L_{m,0}(\vartheta, \varphi, \psi) = Y_{L,m}(\vartheta, \varphi) = P_L^m(\vartheta)\exp(-im\varphi)\,, \tag{3.14}$$

and rotational symmetry of the distribution reduces the problem to Legendre polynomials of one angle, ϑ

$$D^L_{0,0}(\vartheta, \varphi, \psi) = Y_{L,0}(\vartheta, \varphi) = P_L(\vartheta)\,. \tag{3.15}$$

http://rcin.org.pl

3.3. Effect of impingement of particles on rotational diffusion

A special kind of interactions in concentrated systems of rodlike particles consisting in reduction of the rotational diffusion coefficient by impingement ("entanglement") has been proposed by DOI and EDWARDS [21 - 23].

Considering a system of rods with length, L, and number concentration, c, and using the "tube" model, Doi and Edwards propose orientation-dependent diffusion coefficient D^{11} in the form

$$D^{11}(\Theta)/D_0 = \mathrm{const}[cL^3 \int \Psi(\Theta')|\mathbf{u} \times \mathbf{u}'|d\Theta']^{-2}. \tag{3.16}$$

D_0 is rotational diffusion coefficient for an isolated rod ($c = 0$). The integral in Eq. (3.16) is almost identical with the Onsager hard-rod potential (Eq. (3.10) and has the same physical background: excluded volume interactions between the rods. Equation (3.16) applies only to concentrated and low-oriented systems, yielding unphysical behavior ($D^{11} > D_0$, $D^{11} \to \infty$ at $cL^3\langle|\mathbf{u} \times \mathbf{u}'|\rangle \to 0$) for small concentrations and/or high degrees of orientation. According to Eq. (3.16) rotational diffusion coefficient for a rod depends on its own orientation (Θ) (vector $\mathbf{u}$), as well as on the average orientation of particles in the system (function $\Psi(\Theta')$ under the integral). The formula (3.16) has been criticised by various authors, and alternative expressions for collision-affected diffusion tensor have been proposed [24 - 28].

Intuitively, reduction of rotational mobility in a concentrated system by interparticle collisions seems plausible. Direct estimates based on experimental measurements (relaxation of birefringence [25], light scattering [28] or numerical simulation [26]) are qualitatively consistent with predictions of Eq. (3.16) in the range of medium concentrations, though quantitative agreement requires correction of the original Doi and Edwards treatment. How modified diffusion tensor should be used in the kinetic equation (2.1) is a different question, though. KUZUU and DOI [10] suggest using modified D^{11} from Eq. (3.16) in the kinetic equation beside the excluded volume potential, considered a part of $U_{\mathrm{int}}(\Theta)$. Other authors [28, 29] use modified diffusion coefficients in diffusion equations free from the excluded volume potential. Physical origin of mobility reduction (Eq. (3.16)) and hard-rod interactions, $U_{\mathrm{int}}(\Theta)$, is the same: impenetrability of particles and excluded volume. The same effect should not be counted twice: once in the modified diffusion tensor, second time as an explicit potential. Therefore, introducing the excluded volume potential into Eq. (2.1) we will use unperturbed diffusion tensor $\mathbf{D}_r = \mathbf{D}_0$ in the flow potential $H(\Theta)$.

4. "Equilibrium" orientation distribution with mean-field intermolecular interactions

Appearance of a functional of the orientation distribution as an interaction term, considerably changed mathematical shape of the orientation problem. Differential equation (2.1) is converted into an integro-differential one:

$$\begin{aligned}\partial\Psi/\partial t + \mathrm{div}_r[\Psi \cdot \dot{\Theta}_0 - D_r(\mathrm{grad}_r\, \Psi + \Psi \cdot \mathrm{grad}_r\, U_0/kT \\ + \Psi \cdot \mathrm{grad}_r \int \Psi(\Theta')\beta(\Theta, \Theta')d\Theta')]/kT = 0.\end{aligned} \tag{4.1}$$

Appearance of the interaction potential in the form of a functional $U_{\mathrm{int}}[\Psi(\Theta)]$ does not affect conditions required for "equilibrium" distribution. Whenever the potential H defined in Eq. (2.6) is admitted, "equilibrium" orientation distribution can be found from

http://rcin.org.pl

the integral equation

$$\ln\Psi(\Theta) + U_0(\Theta)/kT - H(\Theta) + \int \Psi(\Theta')\beta(\Theta,\Theta')\,d\Theta'/kT = \text{const}\,. \tag{4.2}$$

Equation (4.2) is identical with one obtained by minimization of the free energy functional $\mathcal{A}$ (cf. Ref. [8])

$$\begin{aligned}\mathcal{A}[\Psi(\Theta)] = ckT\ln c + ckT\int \Psi(\Theta)\ln\Psi(\Theta)d\Theta + c\int \Psi(\Theta)(U_0 - kTH)d\Theta \\ +1/2c^2\int \Psi(\Theta)d\Theta\int \Psi(\Theta')\,d\Theta'\beta(\Theta,\Theta') = \text{minimum}\,.\end{aligned} \tag{4.3}$$

The distribution $\Psi(\Theta)$ is subject to normalization

$$\int \Psi(\Theta)\,d\Theta = 1\,. \tag{4.4}$$

Variation of $\mathcal{A}[\Psi(\Theta)]$ with respect to Ψ with the normalization condition yields an equation equivalent to Eq. (4.2)

$$kT[\ln\Psi(\Theta) + 1] + U_0(\Theta) - kTH(\Theta) + c\int \Psi(\Theta')\,d\Theta'\beta(\Theta,\Theta') + \xi = 0\,, \tag{4.5}$$

where ξ denotes Lagrange multiplier. Agreement of the "zero-flux" solution obtained from the kinetic equation with the one corresponding to minimum free energy shows that we are dealing with some kind of "equilibrium". Quotation marks account for the fact that true thermodynamic equilibrium does not exist because the energy is permanently dissipated. Potential flow, however, contributes to the effective potential of the particles, and Boltzmann-type orientation distribution.

Special solution of Eq. (4.5) can be obtained by the use of "test functions". Form of the function $\Psi(\Theta)$ is assumed, and free energy functional $\mathcal{A}[\Psi(\Theta)]$ minimized with respect to the parameters. ONSAGER [8] using hard-rod potential (Eq. (3.10)) proposed for this purpose the function

$$\Psi(\mathbf{u}) = \cosh(a\mathbf{u}\cdot\mathbf{n})/4\pi\sinh(a)\,, \tag{4.6}$$

where $\mathbf{n}$ is a unit vector of arbitrary orientation (director). Other authors [10 - 12], using MAIER-SAUPE potential [9] obtained closed-form solution of Eq. (4.5) in the form

$$\Psi(\vartheta) = \text{const}\exp[A(\mathbf{u}\cdot\mathbf{n})^2] = \text{const}\exp[A\cos^2\vartheta]\,. \tag{4.7}$$

In the latter case an exact solution has been successfully guessed. We shall present a more systematic approach to finding the "equilibrium" orientation distributions in the presence of flow, various potential fields, and intermolecular interactions. The basic requirement is that the intermolecular potential, $\beta(\Theta,\Theta')$, a kernel in the mean-field integral, can be presented in the form

$$\beta(\Theta,\Theta') = \sum_{ij} b_{ij} f_i(\Theta) f_j(\Theta')\,. \tag{4.8}$$

In the consequence of Eq. (4.8) the integral in Eq. (4.2) can be taken directly, yielding

$$U_{\text{int}}(\Theta) = \int \Psi(\Theta')\,d\Theta'\beta(\Theta,\Theta') = \sum_{ij} b_{ij} f_i(\Theta)\langle f_j\rangle\,, \tag{4.9}$$

and reducing integral equation to an algebraic expression. $\langle f_j\rangle$ are moments of the distribution function. With $U_{\text{int}}(\Theta)$ in the form of Eq. (4.9), $\Psi(\Theta)$ results directly as

$$\ln\Psi(\Theta) = \text{const} - U_0(\Theta)/kT + H(\Theta) - \sum_{ij} b_{ij} f_i(\Theta)\langle f_j\rangle/kT\,. \tag{4.10}$$

http://rcin.org.pl

The moments, $\langle f_j \rangle$, are to be found from the consistency conditions

$$(4.10)_1 \qquad \langle f_j \rangle = \int \Psi(\Theta) f_j(\Theta)\, d\Theta$$

and the constant is determined by the normalization condition (4.4).

The crucial condition for the above procedure is Eq. (4.8). When the expansion (4.8) is infinite, also the solution results as an infinite series of functions $f_i(\Theta)$. Especially attractive is the possibility of obtaining closed-form, nonlinear solutions valid in the entire range of variables. Such solutions are possible when $U_{\text{int}}(\Theta)$ is expressible through finite sums, rather than infinite series of $f_i(\Theta)$

$$(4.11) \qquad \beta(\Theta, \Theta') = \sum_{ij}^{n} b_{ij} f_i(\Theta) f_j(\Theta')$$

reducing solution (4.10) to the closed form.

The above approach can be used for any symmetry of orientation distribution, provided that the conditions required for the existence of flow potential $H(\Theta)$ are satisfied. In a general case the natural choice for expansion of intermolecular potentials are Wigner matrices, $D^L_{m,n}(\vartheta, \varphi, \psi)$. Expansion (3.11) guarantees separation of variables Θ and Θ', and commonly performed truncation reduces infinite series to a limited sum.

Interactions of particles with cylindrical symmetry can be adequately described with spherical harmonics, $Y_{L,m}(\vartheta, \varphi)$. Interaction potential (Eq. (3.7)) expanded in Legendre polynomials of the angle between axes of two interacting particles does satisfy condition (4.8) and can be expressed by spherical harmonics. Sums of Legendre polynomials (Eq. (3.7)) cover basic types of interactions between cylindrically symmetrical particles—electrostatic (any finite order of the multipole expansion), excluded volume (cf. COTTER [19]) dispersion forces (MAIER and SAUPE [9] etc.). ONSAGER [8] hard-rod potential in its original form (Eq. (3.10)) does not satisfy Eq. (4.8), but can be approximated by a sum of even Legendre polynomials [19]. Expansion of other potentials in spherical harmonics or Wigner matrices does not provide any problem and the majority of physically significant cases: electric (magnetic) interactions with permanent and induced dipoles (Eq. (3.2)), as well as the admissible flow field effect (Eq. (2.23)) can be expressed by a limited number of orthogonal functions.

5. Discussion

The approach suggested in this paper makes possible obtaining "equilibrium" (zero flux) orientation distributions for systems of rigid particles subjected to extensional flow and a variety of particle-field and particle-particle interactions. Flow regimes admitting such distributions are restricted to axially symmetric flow fields (elongational or compressional) and particles exhibiting cylindrically symmetric shapes. Symmetry of other physical properties of the particles is not restricted. Any symmetry of electric, or magnetic properties can be considered with a variety of interactions taken into account. The resulting orientation distributions can exhibit various types of symmetry with one (ϑ), two (ϑ, φ) or three Euler angles (ϑ, φ, ψ) as independent variables.

As a simple example of the proposed procedure, we will consider cylindrically symmetrical, polar particles subjected to uniaxial flow and an electric field parallel to flow axis. Intermolecular interaction include a dipole-dipole potential,and a hard-rod potential approximated by second Legendre polynomial in the expansion (3.7). The resulting

http://rcin.org.pl

orientation distribution is a function of one angle (ϑ) and will be sought in the form of a sum of Legendre polynomials $P_L(\vartheta)$. All potentials involved exhibit cylindrical symmetry around axis X_3 of the laboratory coordinate system, viz.:

1. Extensional flow introduces a $P_2(\vartheta)$ term proportional to velocity gradient divided by rotational diffusion coefficient.

2. Particle energy in the external electric field consists of two terms dependent on the field intensity, **E**. $P_1(\vartheta)$ term describes energy of permanent dipoles, and $P_2(\vartheta)$ - dipoles induced in the field **E**.

3. The mean-field intermolecular potential consists of two terms derived from Eq. (3.7). Dipole-dipole interactions reduce to a $P_1(\vartheta)\langle P_1\rangle$ term, and hard-rod excluded volume potential approximated by Maier–Saupe function yields $P_2(\vartheta)\langle P_2\rangle$ term.

The integrated kinetic equation (4.10) expressed through functions f_i (here: Legendre polynomials, $P_L(\vartheta)$) assumes the form

$$\ln\Psi(\vartheta) = hP_2(\vartheta) + e_1P_1(\vartheta) + e_2P_2(\vartheta) + u_1P_1(\vartheta)\langle P_1\rangle + u_2P_2(\vartheta)\langle P_2\rangle + \text{const}, \tag{5.1}$$

h, e_1, e_2, u_1 and u_2 denote (known) constants determined by material properties and external conditions. $h \propto (A_{33} - A_{11})/D^{11}$ is related to flow field, $e_1 \propto (\mu_p E)$ and $e_2 \propto (\Delta\alpha E^2)$ describe energy of permanent and induced dipoles in the electric field. $u_1 \propto (c\mu_p^2)$ and $u_2 \propto (cL^2d)$ represent, respectively, dipole-dipole and hard-rod interactions.

It is evident that orientation distribution can be presented in the form

$$\Psi(\vartheta) = \exp(C)\cdot\exp[A\cdot P_2(\vartheta) + B\cdot P_1(\vartheta)]. \tag{5.2}$$

The coefficients A and B result directly from Eq. (4.10)

$$\begin{aligned} A &= h + e_2 + u_2\langle P_2\rangle, \\ B &= e_1 + u_1\langle P_1\rangle, \end{aligned} \tag{5.3}$$

$\exp(C)$ is a normalization constant determined by the integral

$$\exp(C) = \left\{\int \sin\vartheta\, d\vartheta\, d\varphi\, d\psi \exp[A\cdot P_2(\vartheta) + B\cdot P_1(\vartheta)]\right\}^{-1}, \tag{5.3$_1$}$$

and the moments $\langle P_1\rangle$, $\langle P_2\rangle$ may be obtained from the consistency equations

$$\begin{aligned} \langle P_1\rangle &= \exp(C)\int \sin\vartheta\, d\vartheta\, d\varphi\, d\psi P_1(\vartheta)\exp[A\cdot P_2(\vartheta) + B\cdot P_1(\vartheta)], \\ \langle P_2\rangle &= \exp(C)\int \sin\vartheta\, d\vartheta\, d\varphi\, d\psi P_2(\vartheta)\exp[A\cdot P_2(\vartheta) + B\cdot P_1(\vartheta)]. \end{aligned} \tag{5.4}$$

More complex "equilibrium" distributions are obtained when particles and/or field conditions exhibit lower symmetry. Orientation distribution dependent on two polar angles (ϑ, φ) expressed by sums of spherical harmonics, $Y_{L,m}$, result when cylindrically symmetric particles are subjected to extensional flow and an electric or magnetic field inclined to flow axis. Orientation distributions dependent on three Euler angles $(\vartheta, \varphi, \psi)$ are obtained when particles, geometrically cylindrical, exhibit triaxial symmetry of electric (or magnetic) properties. The basis of functions used for expression of intermolecular potentials is provided by generalized spherical harmonics—Wigner matrices, $D^L_{m,n}$. Detailed solutions and their physical consequences will be presented and discussed separately.

http://rcin.org.pl

References

1. H. A. KRAMERS, Physica, **11**, 1, 1944; J. Chem. Phys., **14**, 415, 1946.
2. L. G. LEAL and E. J. HINCH, Rheol. Acta, **12**, 127–132, 1973.
3. A. ZIABICKI and L. JARECKI, IFTR Reports, 1, 1982.
4. R. TAKSERMAN-KROZER, J. Polymer Sci., **1A**, 2477, 1963.
5. R. B. BIRD and C. F. CURTISS, J. Chem. Phys., **51**, 3023, 1969.
6. A. ZIABICKI, *Fundamentals of fibre formation*, Wiley, p. 96, London 1979.
7. A. ZIABICKI and L. JARECKI, Colloid and Polymer Sci., **264**, 343, 1986; Rheol. Acta, **26** Suppl., 83, 1988.
8. L. ONSAGER, Ann. NY Acad. Sci., **51**, 627, 1949.
9. W. MAIER and A. Z. SAUPE, Z. Naturforsch., **A**, 882, 1959.
10. N. KUZUU and M. DOI, J. Phys. Soc. Japan, **52**, 3486, 1983; ibid. **53**, 1031, 1984.
11. A. ZIABICKI, *Isotropic ⇒ nematic transition in a system of rigid rodlike particle subjected to elongational flow*, Paper presented at the conference "Theory of Aggregation and Coagulation II", Warsaw, June 1989.
12. G. MARUCCI, Mol. Cryst. and Liquid Cryst., **72**, 153, 1982.
13. L. JARECKI, M. KOŚĆ and A. ZIABICKI, IFTR Reports, 22, 1990.
14. A. ZIABICKI, IFTR Reports, p.71, 41, 1987; Arch. Mech., **42**, 703–715, 1990.
15. G. B. JEFFERY, Proc. Roy. Soc. London, **A102**, 161, 1922.
16. H. YAMAKAWA, *Modern theory of polymer solutions*, Harper and Row, p. 325, New York 1971.
17. G. R. LUCKHURST, *Molecular field theories of nematics*, in: The Molecular Physics of Liquid Crystals, G. R. LUCKHURST and G. W. GRAY [Eds.], p.85, Academic Press, 1979.
18. A. J. STONE, *Intermolecular forces*, in Ref. [17], p. 31.
19. M. COTTER, *The van der Waals approach to nematic liquids*, in Ref. [17], p. 181.
20. C. ZANNONI, *Distribution functions and order parameters*, in Ref. [17], p. 51.
21. M. DOI, J. Physique, **36**, 607, 1975.
22. M. DOI and S. F. EDWARDS, J. Chem. Soc., Faraday Trans., **74**, 560, 1978.
23. M. DOI and S. F. EDWARDS, *The theory of polymer dynamics*, Clarendon Press, Oxford 1986.
24. I. TERAOKA, Y. MORI, N. OOKUBO and R. HAYAKAWA, Repts. Progr. Polymer Phys. Japan, **27**, 127, 1984.
25. J. A. ODELL, A. KELLER and E. D. T. ATKINS, Macromolecules, **18**, 1443, 1986; Polymer Letters, **21**, 289, 1983.
26. J. M. RALLISON, J. Fluid Mech., **186**, 471, 1988.
27. A. ZIABICKI, IFTR Reports, 26, p. 99, 1990.
28. K. M. ZERO and R. PECORA, Macromolecules, **15**, 87, 1982.
29. S. JAIN and C. COHEN, Macromolecules, **14**, 769, 1981.

POLISH ACADEMY OF SCIENCES
INSTITUTE OF FUNDAMENTAL TECHNOLOGICAL RESEARCH.

Received January 7, 1991.

http://rcin.org.pl